SFD – DOCSIS® Signal Generator

Daniel Schorm
Product Management
Audio Analyzers & Broadcast Signal Generators
2017-08

ROHDE&SCHWARZ

Abbreviations

- ATP Acceptance test procedure
- BER Bit error ratio
- CER Codeword error ratio
- CM Cable modem
- CMTS Cable modem termination system
- CP Continual pilot
- CoS Class of service
- CP Cyclic prefix Continuous pilot
- CW Codeword or Continuous wave
- DOCSIS Data over cable service interface specification
- DPD Downstream profile descriptor
- DS Downstream
- FDI Frequency domain interleaving
- FEC Forward error correction
- FFT Fast Fourier transform
- GI Guard interval
- HFC Hybrid fiber coaxial
- IFFT Inverse fast Fourier transform
- ISI Intersymbol interference
- LDPC Low density parity check
- MER Modulation error ratio
- NCP Next codeword pointer
- OCD OFDM channel descriptor
- (C)OFDM (Coded) orthogonal frequency division multiplex
- (C)OFDMA (Coded) orthogonal frequency division multiple access
- PLC Physical layer link channel
- QAM Quadrature amplitude modulation
- RS Reed-Solomon
- SP Scattered pilot
- TDI Time domain interleaving
- US Upstream

Cable network architecture – DSA's sites of operation

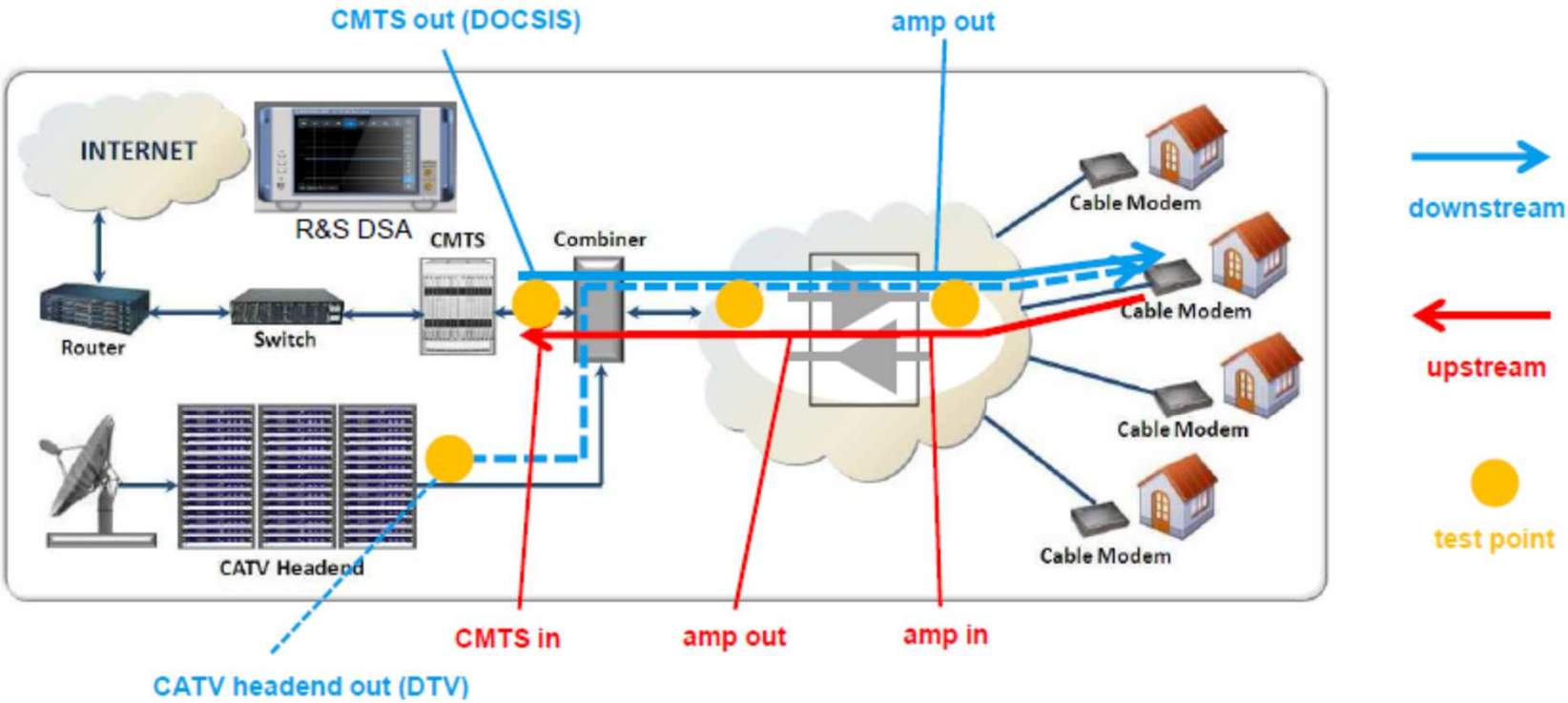

DOCSIS 3.1 Downstream, Upstream

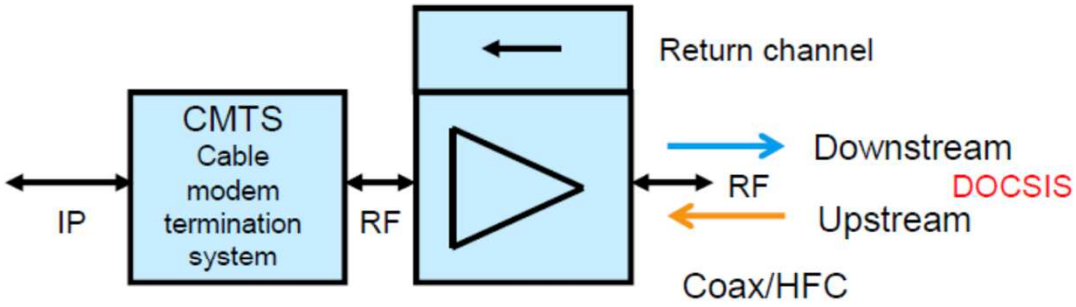

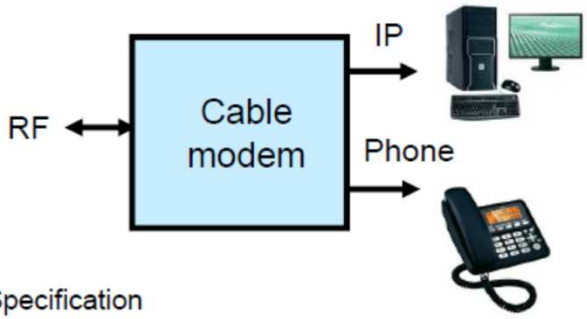

DOCSIS – Data-over-Cable Service Interface Specification

DOCSIS 3.1 Downstream

up to 16384QAM 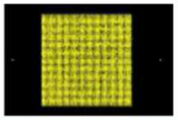

Parameter	DOCSIS 3.1	DOCSIS 3.0
Type of modulation	OFDM 4K and 8 K FFT	single carrier (J.83/B, DVB-C)
Frequency range	108 MHz to 1218 MHz (1794 MHz)	45 MHz to 1002 MHz
Channel bandwidth	up to 192 MHz	6 MHz / 8 MHz
QAM constellations	up to 4096, 8k, 16k	up to 256
Cyclic prefix length	0.9375 µs to 5 µs	n/a
Pilots	scattered and continuous	n/a
Forward Error Correction	BCH-LDPC	Reed-Solomon
DS capacity (bps)	8 G (10 G)	300 M (1 G)

25 kHz / 50 kHz carrier spacing
7680 / 3840 carriers in 192 MHz bandwidth

DOCSIS 3.1 Upstream

up to 4096QAM 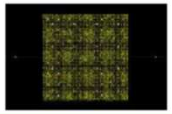

Parameter	DOCSIS 3.1	DOCSIS 3.0
Type of modulation	OFDM 2K and 4 K FFT	single carrier TDMA, S-CDMA
Frequency range	5 MHz to 204 MHz	5 MHz to 85 MHz
Channel bandwidth	up to 96 MHz	up to 6.4 MHz
QAM constellations	up to 4096	QPSK to 64
Cyclic prefix length	0.9375 µs to 6.25 µs	n/a
Pilots	complimentary and continuous	n/a
Forward Error Correction	LDPC	Reed-Solomon
DS capacity (bps)	400 M (1 G to 2.5 G)	100 M (300 M)

25 kHz / 50 kHz carrier spacing
3840 / 1920 carriers in 96 MHz bandwidth

DOCSIS 3.1 Frequency Plan

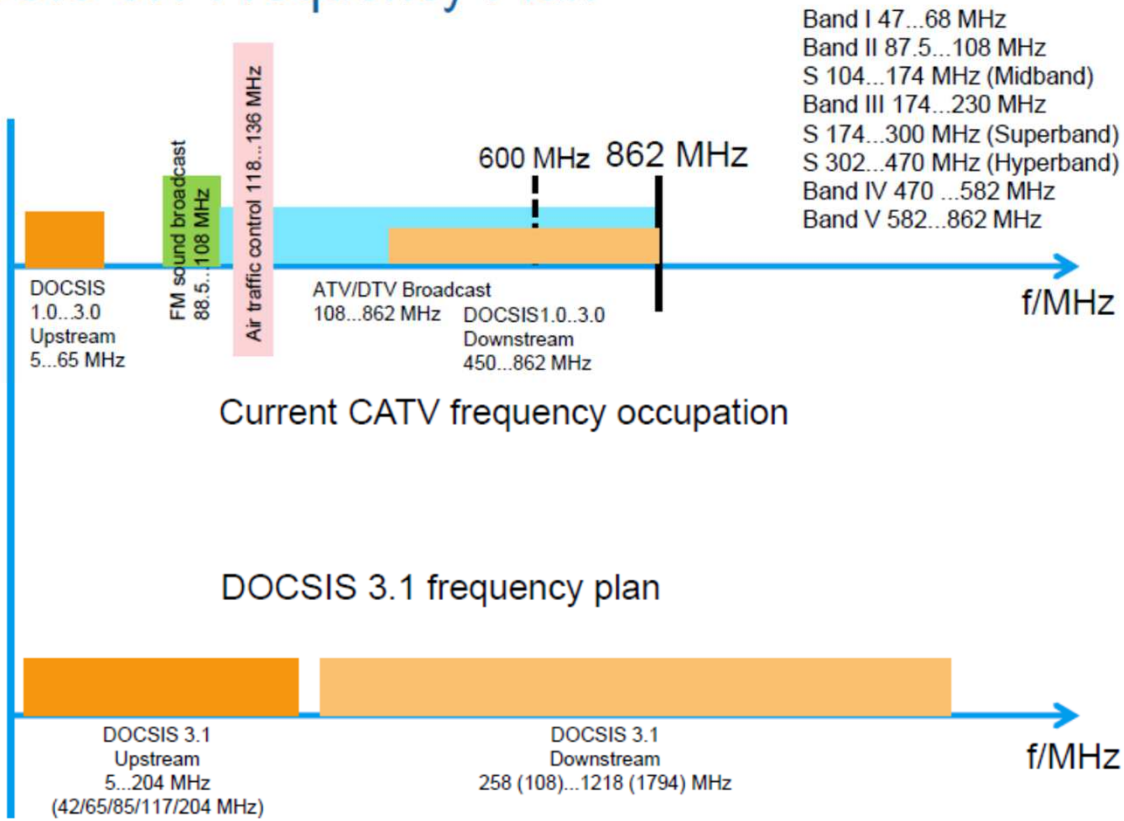

DOCSIS 3.1 Channel Occupation

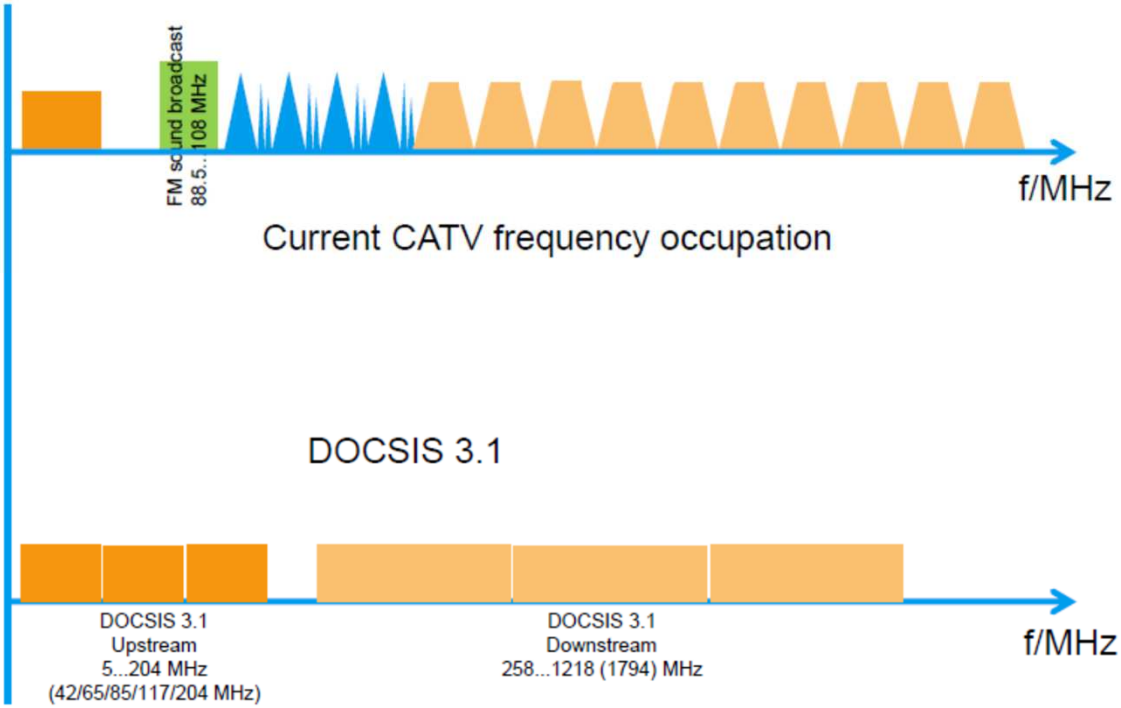

DOCSIS3.1 Portfolio

DOCSIS 3.1 signal generators for down- and upstream

R&S CLGD
Full Channel Generator

R&S SFD
Single Channel Generator

DOCSIS 3.1 signal analysis

R&S DSA DOCSIS Signal Analyzer

R&S FSW
R&S FSW-B320 (B500)
R&S FSW-K192 (DS)
R&S FSW-K193 (US)

The R&S DSA in more detail

- Front panel -

- 12.1” touch screen
- 3 x (+1 x on rear) USB
- RF in Downstream (75 Ω F female)
- RF in Upstream (75 Ω F female) **only mod. 03**
- Weight: 7.5 kg
  Dimensions (B x H x T):
  362 mm x 178 mm x 350 mm

The R&S DSA in more detail

- Block diagram -

- Downstream receiver
- Upstream receiver only mod. 03
- FPGA based demodulation
- Baseband outputs SFP+ (DOCSIS 3.1) ASI (DOCSIS 3.0, J.83)
- Trigger/REF in/out

Overview of the R&S DSA interfaces and function blocks

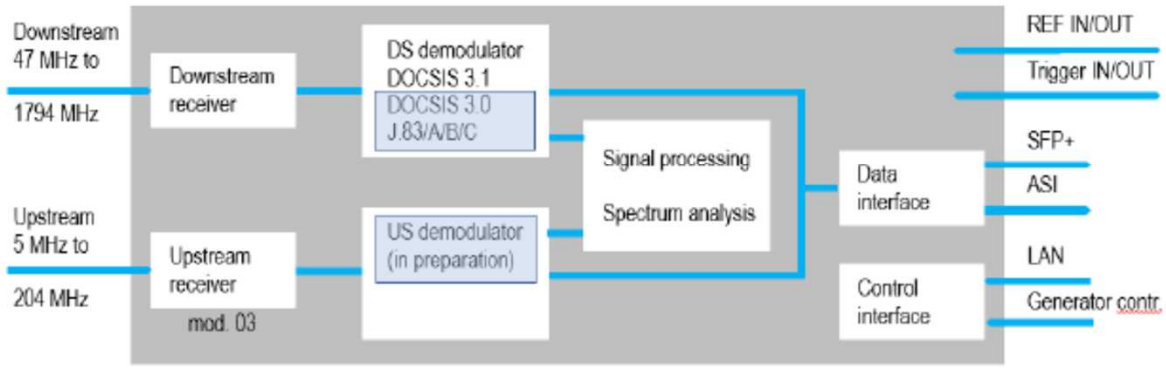

= software option

SFD

ROHDE&SCHWARZ
SFD · DOCSIS® Signal Generator
Data In SFP+
Status
Ext Ref
Downstream Out
Upstream Out

Ref In
Aux
Control LAN
Trigger In
Marker Out
Reset
F1/F2:
IEC60127-2/5: T3.15H 250 V
100 – 240 V~
50 – 60 Hz
200 VA

SFD basic concept

Single-channel signal generator for DOCSIS and cable TV with:

- downstream signal for DOCSIS 3.0 and 3.1 modulations
- upstream signal for DOCSIS 3.0 and 3.1
- ARB in up- and downstream
- frequency extensions for DOCSIS 3.1

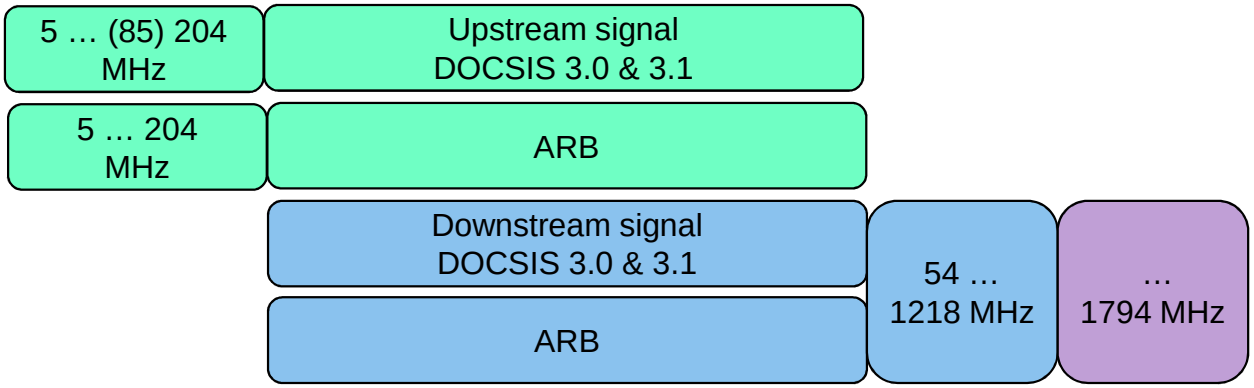

SFD Options concept

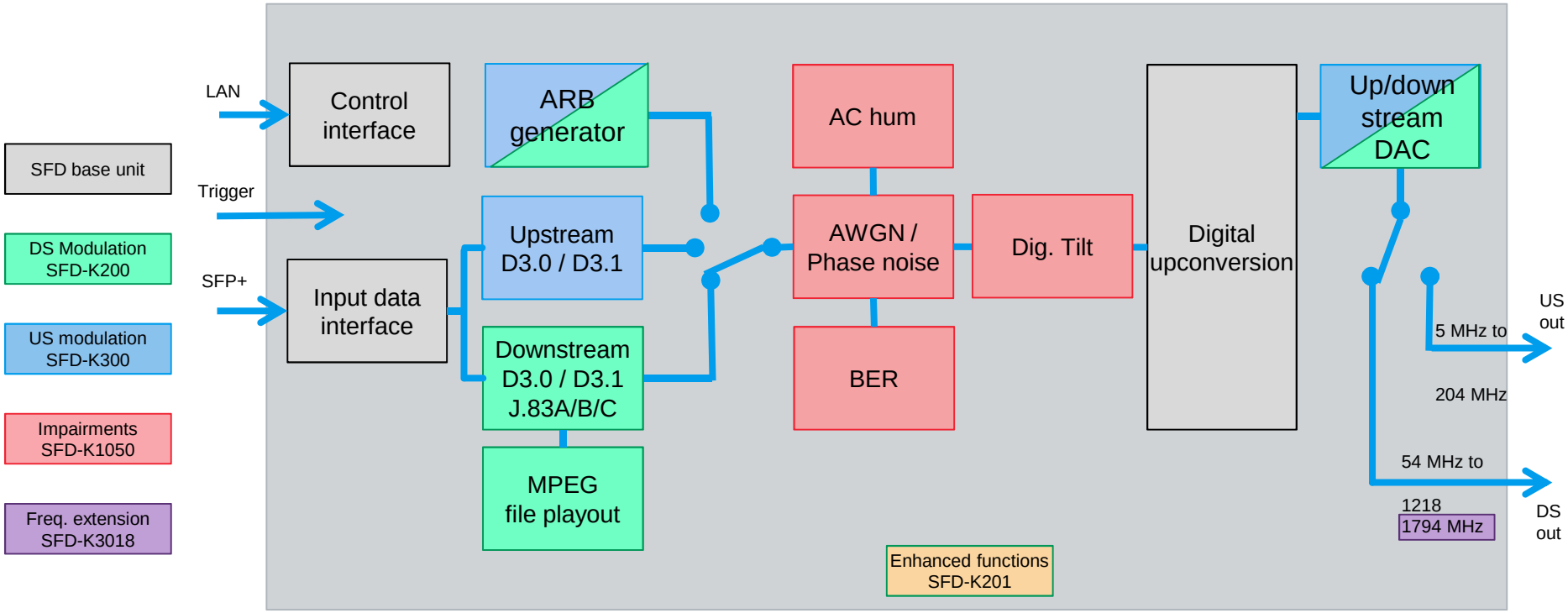

SFD Options description

- Base unit SFD:
  - instrument chassis with no function
  - requires US or DS option for a valid configuration
- Basic waveform lib (CLGD-K2)
  - pre defined FM and ATV waveforms

- Downstream modulation option (SFD-K200):
  - single-channel real-time signal generation
  - DOCSIS 3.1, 3.0, J.83/A/B/C, ARB generator (up to 200MHz BW)
  - standard frequency range 54 MHz up to 1218 MHz

- Upstream modulation option (SFD-K300):
  - single-channel real-time signal generation
  - DOCSIS 3.1, 3.0 (TDMA, S-CDMA), ARB generator
  - frequency range 5 MHz up to 204 MHz

- Downstream frequency extension (SFD-3018):
  - Extends DS frequency from 1218 MHz up to 1794 MHz
    (total frequency range 54 MHz to 1794 MHz)

- Impairments simulation (SFD-K1050):
  - BER
  - AWGN, phase noise
  - AM hum
  - Signal tilt

- Enhanced functions DS (SFD-K201):
  - Insertion of DOCSIS timestamps, Flow rate indicator, FSW compatibility mode

Downstream

Parameter	
Frequency range	54 … 1218 MHz 54 … 1794 MHz (with SFD-K3018)
Supported signals	DOCSIS3.1, DOCSIS3.0, J83A/B/C, ARB
Level	DOCSIS3.1: 39 … 59 dBmV DOCSIS3.0, J83A/B/C, ARB: 42 … 62 dBmV
Bandwidth	DOCSIS3.1: 24 MHz … 192 MHz DOCSIS3.0, J83A/B/C: 6/8 MHz ARB: up to 200 MHz
MER	DOCSIS3.1: typ. 57 dB (external reference)

Upstream

Parameter	
Frequency range	DOCSIS3.1, ARB: 5 … 204 MHz DOCSIS3.0: 5 … 85 MHz
Supported signals	DOCSIS3.1, DOCSIS3.0, ARB
Level	DOCSIS3.1: 39 … 59 dBmV DOCSIS3.0, ARB: 42 … 62 dBmV
Bandwidth	DOCSIS3.1: 10 MHz … 96 MHz DOCSIS3.0: 0,8/1,6/3,2/6,4 MHz ARB: up to 100 MHz

Impairments / Enhanced functions

Parameter	
Impairments SFD-K1050	BER: 1×10^{-2} to 1×10^{-6} AWGN: –5 dBc bis –50 dBc AC hum: 0 % to 6 % Phase noise: –65 dBc to –30 dBc/-57 dBc Dig. Tilt +-15dB/GHz
Enhanced functions SFD-K201	Insertion of DOCSIS Timestamps in downstream PLC Flow Rate Indicator DOCSIS 3.1 PLC Mode (FSW compatibility)

General technical specifications

Parameter	
Temperature	0 °C to +45 °C
Power Voltage	100 V to 240 V AC
Calibration interval	after 12 months, then every 36 months
Dimensions	233 mm × 107 mm × 372 mm, (½ 19", 2 HU)
Weight	3,25 kg

Configuration

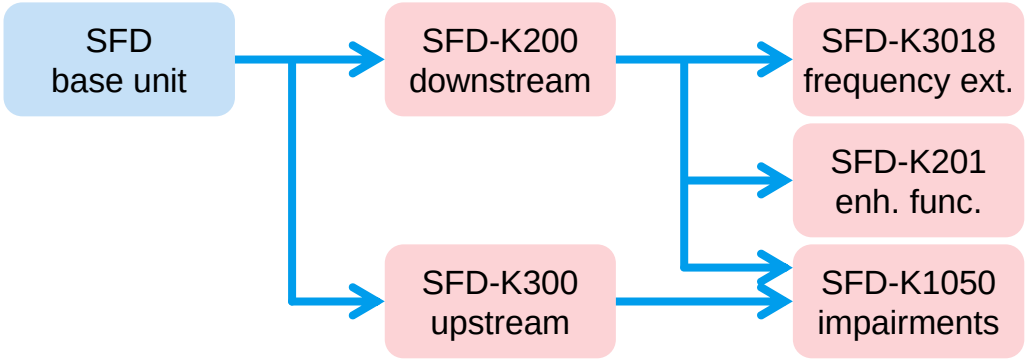

All options are software licenses. They can be enabled any time by means of a key code.

item	type	Part no.
SFD base unit	SFD	2118.7400.02
Downstream Modulation (incl. CLGD-K2)	SFD-K200	2118.7423.02
Enhanced Functions	SFD-K201	2118.7830.02
Upstream Modulation	SFD-K300	2118.7430.02
Impairments simulation	SFD-K1050	2118.7446.02
Ext Freq. Range 1794 MHz	SFD-K3018	2118.7452.02
SFD with all options		

How complement SFD – CLGD?

	SFD	CLGD
Channels	1	multi ✓
Functionality	high	very high ✓
MER-Performance	excellent (+3 dB, typ. 57dB) ✓	good
DS freq flexibility	54 … 1794 MHz one output ✓	47 … 1218 MHz 252 … 1794 MHz two outputs
US modulation	realtime ✓	ARB
Impairments	subset of CLDG but incl. **BER** ✓	extensive ✓
Price	~32-37% ✓	100%
Size	very compact ✓	compact

Consumer Electronics
Application: modem and TV tuner RF testing

- Testing tuners for technical performance

- Recommended SFD configuration:
  - downstream
  - impairments
  - frequency extension as future upgrade

HFC Hybrid fiber coaxial equipment makers
Application: amps & optical transceivers load testing

- Adding a high performance signal to a typical load scenario generated by a CLGD.

- Recommended SFD configuration:
  - downstream
  - upstream
  - frequency extension as future upgrade

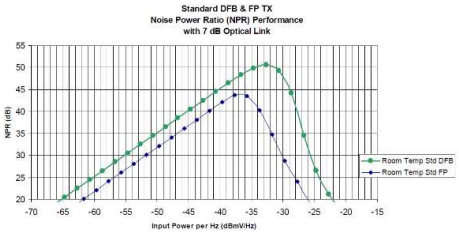

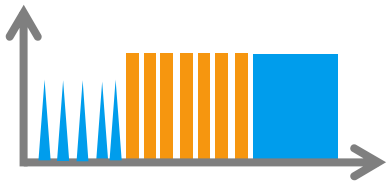

CMTS Cable modem termination system manufacturers
Application: upstream simulation and upstream receiver testing

- Efficient emulation of traffic of a cable modem.
- Simulation of effects of impairments.
- RF testing of upstream receivers.

- Recommended SFD configuration:
  - upstream
  - Impairments (BER)

Cable network operators
Application: network simulation

- Simulation of DOCSIS3.1 scenarios in real networks
- Adding a DOCSIS3.1 DS or UP stream signal

- Recommended SFD configuration:
  - downstream
  - upstream
  - impairments
  - frequency extension as future upgrade